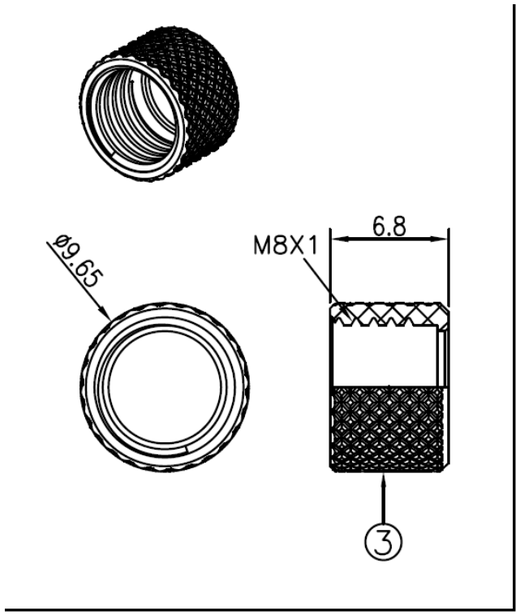

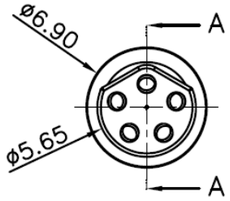

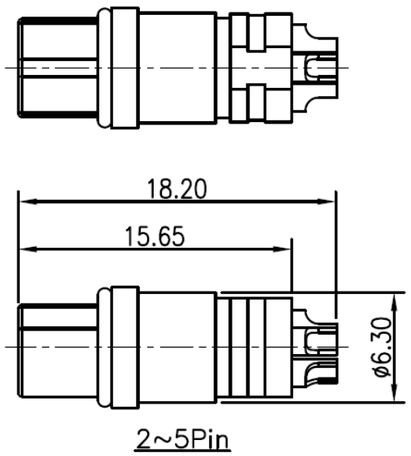

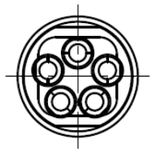

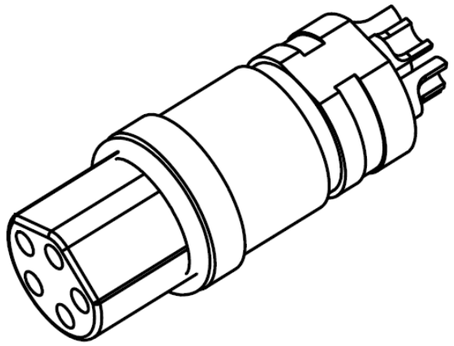

Specification:
Current Rating: 3A (2~5P); 1A(6~8P) AC/DC
Voltage Rating: 60V(2~3P); 30V(4~8P) AC/DC
Contact Resistance: 5m ohm Max.
Insulation Resistance: 100M ohm Min.
Withstanding Voltage: 500V AC/Minute (2~5P)
250V AC/Minute (6~8P)
Waterproof Rate: IP67
Operating Temperature Range: -40°C ~ +85°C

CC08-XXS-X-MM
- Molding
- Coding: A or B
- Socket
- No. of Contacts
- M8

Pin Assignments Front View

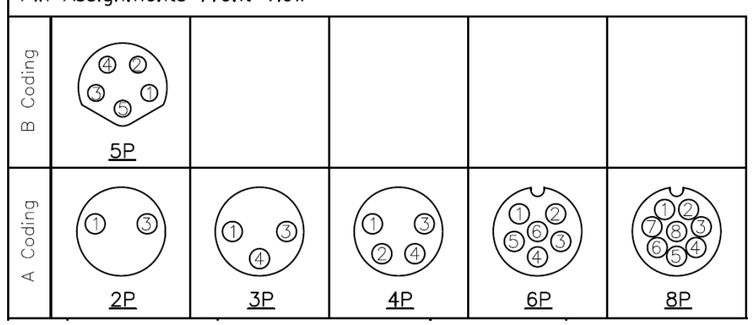

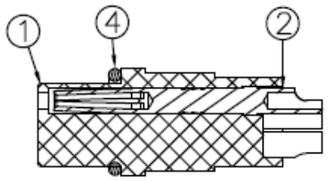

SEC:A–A

Item	Description	Material	Remark	Q'TY
1	Insulator	Nylon	UL94V–0 Black	1
2	Terminal	Phosphor Bronze	Gold Plated 1u"	2~8
3	Nut	Copper Alloy	Nickel Plated 60u"	1
4	O–Ring	Silicone	Red	1

REVISION HISTORY

REV	DESCRIPTION	CHG REF	DATE	DESIGNER
1.0	Origin	-	21 08 2023	Owen Page

DO NOT SCALE
Unit of Measure: millimetres (mm)

Third Angle Projection

Designed by Owen Page

X.X - +-0.30
X.XX - +-0.25

Design Right Protected

©2023

Date 21 08 2023

A4

RoHS Compliant

Cambridge Electronic Industries Ltd

This document and all the data contained herein is and shall remain the property of Cambridge Electronic Industries Ltd and may not be used or copied for any purpose whatsoever without the written permission of Cambridge Electronic Industries Ltd.

Description:
M8 Socket Solder Type For Overmolded With Cable

Part No: CC08-XXS-X-MM

Issue 1.0

Sheet 1 / 1