6GHz BNC Coaxial Connectors
Crimp Cable Terminating Connectors and Patch Cables
Part Numbers XBT-1064-NGXX, XBT-1066-NGXX, XBT-1062-NGXX

General Description

Cambridge Connectors range of three part cable terminating connectors feature precision 75Ω BNC connectors, available in male and female connection types and for a wide range of cable styles., including Belden 1505A, 1694A, 1855A and RG179.

The XBT-1064-NGxx features a BNC bulkhead socket.
The XBT-1066-NGxx features a BNC free cable socket.
The XBT-1062-NGxx features a BNC free cable plug.

Features

- Precision 6GHz 75Ω BNC Connector
- Optimised for 6G HD-SDI
- Suitable for a wide range of cable styles
- Fully assembled precision 75Ω BNC patch cables available in standard and custom lengths

6G SDI CoaxVision™

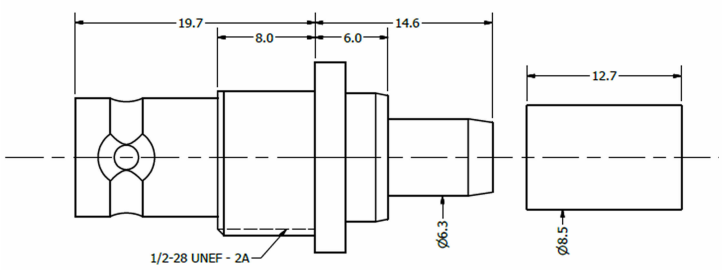

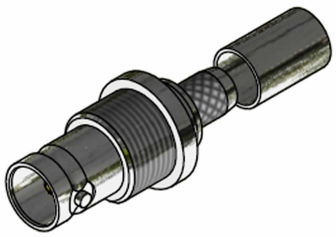

XBT-1064-NGxx
BNC bulkhead socket

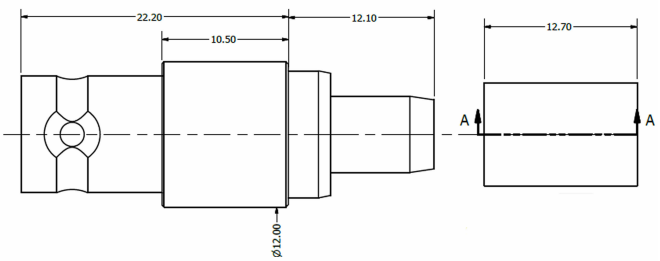

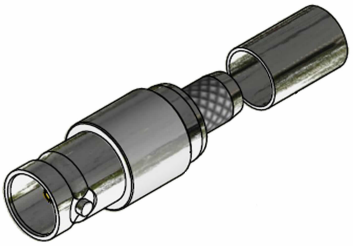

XBT-1062-NGxx
BNC free cable socket

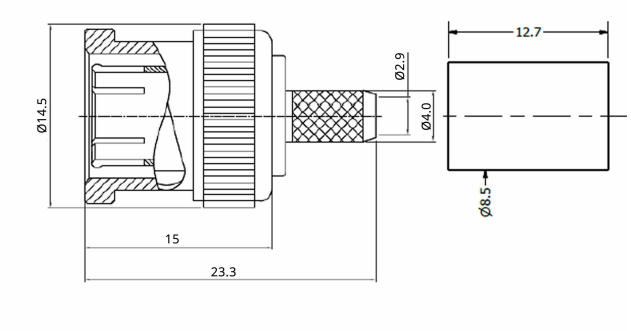

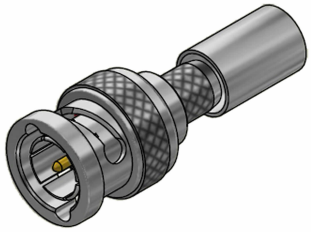

XBT-1062-NGxx
BNC free cable plug.

CAMBRIDGE ELECTRONIC INDUSTRIES

Tel: +44 (0)1223 860041
Tel: +44 (0)1223 863377
Email: sales@cambridgeelectronics.com