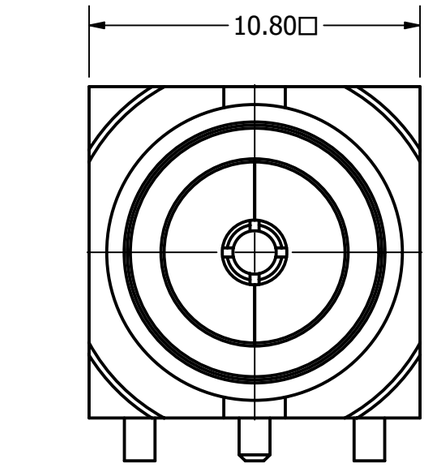

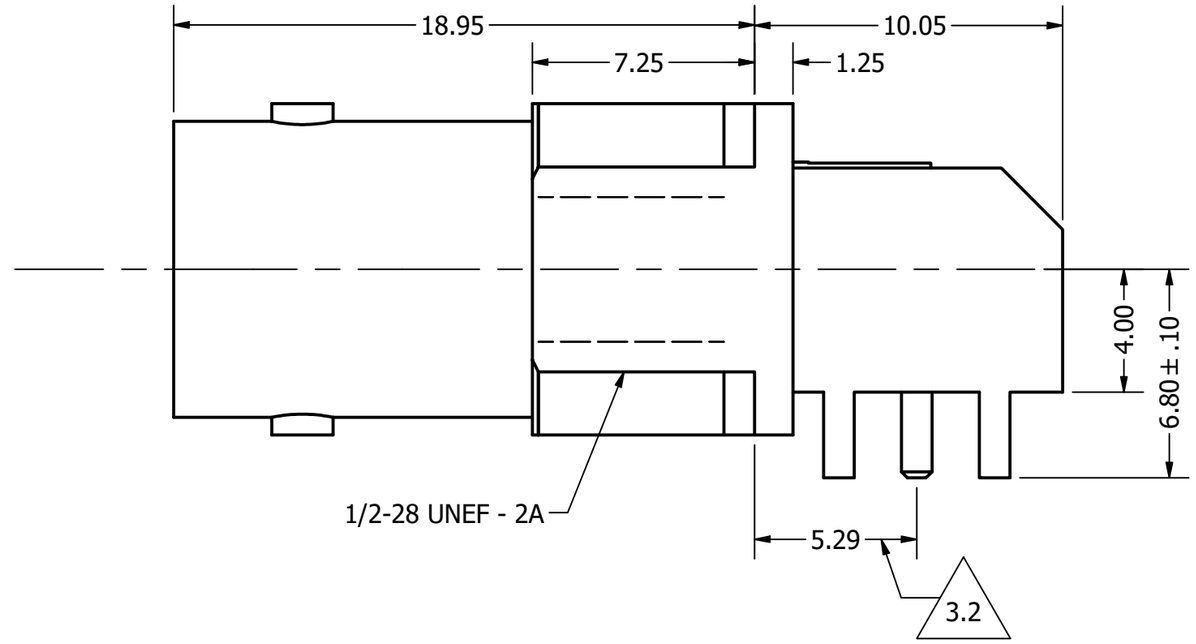

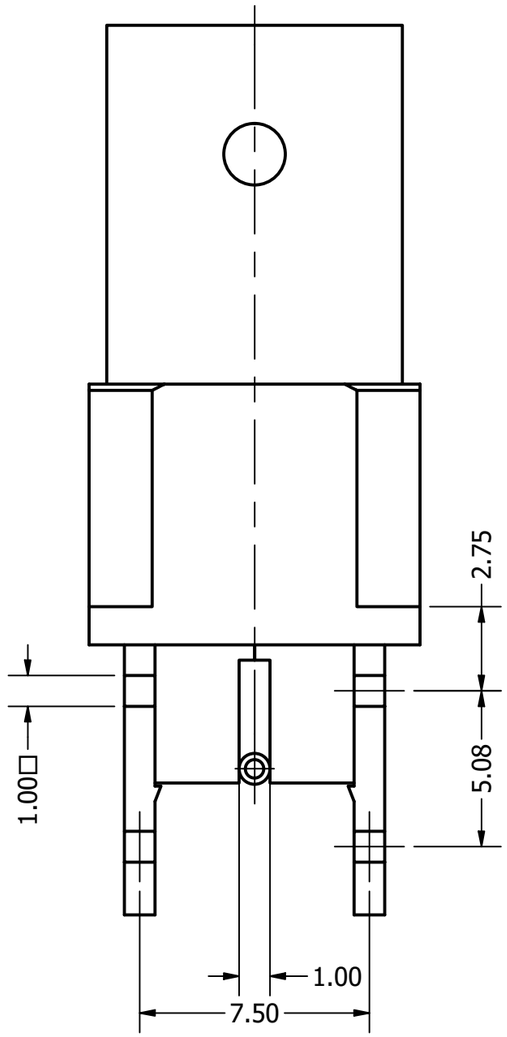

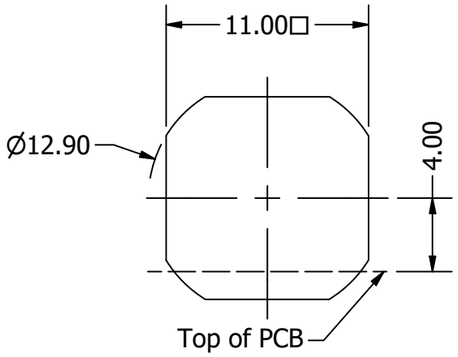

Recommended panel cutout

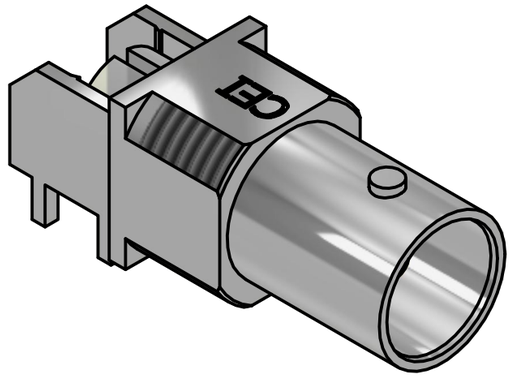

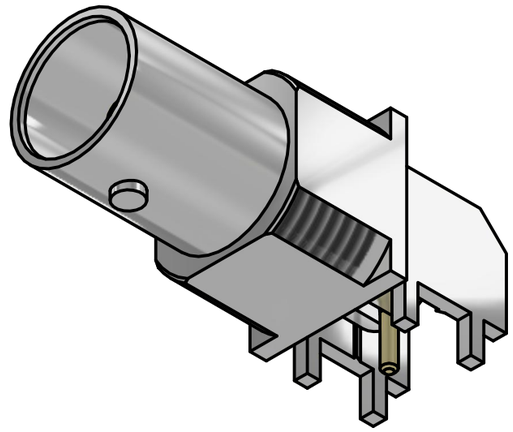

REVISION HISTORY				
REV	DESCRIPTION	CHG REF	DATE	DESIGNER
3.0	Updated P/N	FB / INT	28 Nov 2024	Peter Millard
3.1	Updated INS TOL	FB / SUPP	22 Jul 2025	Peter Millard
3.2	Added measurement from contact to flange	FB / INT	20 Aug 2025	Martin Smith
3.3	Refined BDY drawing	FB / INT	04 Sep 2025	Peter Millard

Design Right Protected

Material:

Finish:

Gen Tol ±0.10 Angular ±2°

DO NOT SCALE

Unit of Measure: millimeters (mm)

Third Angle Projection

Designed by P. Fayers

Checked by

Approved by

©2024

Date 09 Jan 2008

A3

RoHS Compliant

CAMBRIDGE ELECTRONIC INDUSTIRES

This document and all the data contained herein is and shall remain the property of Cambridge Electronic Industries Ltd and may not be used or copied for any purpose whatsoever without the written permission of Cambridge Electronic Industries Ltd.

Description: 75Ω BNC Socket 3GHz Right Angle Bulkhead, 2.8mm Leg with Pathfinder

Part No: XBS-03-RB28-NNV Cust

Issue 3.3

Sheet 1 / 2

Simulation results:
Including PCB element

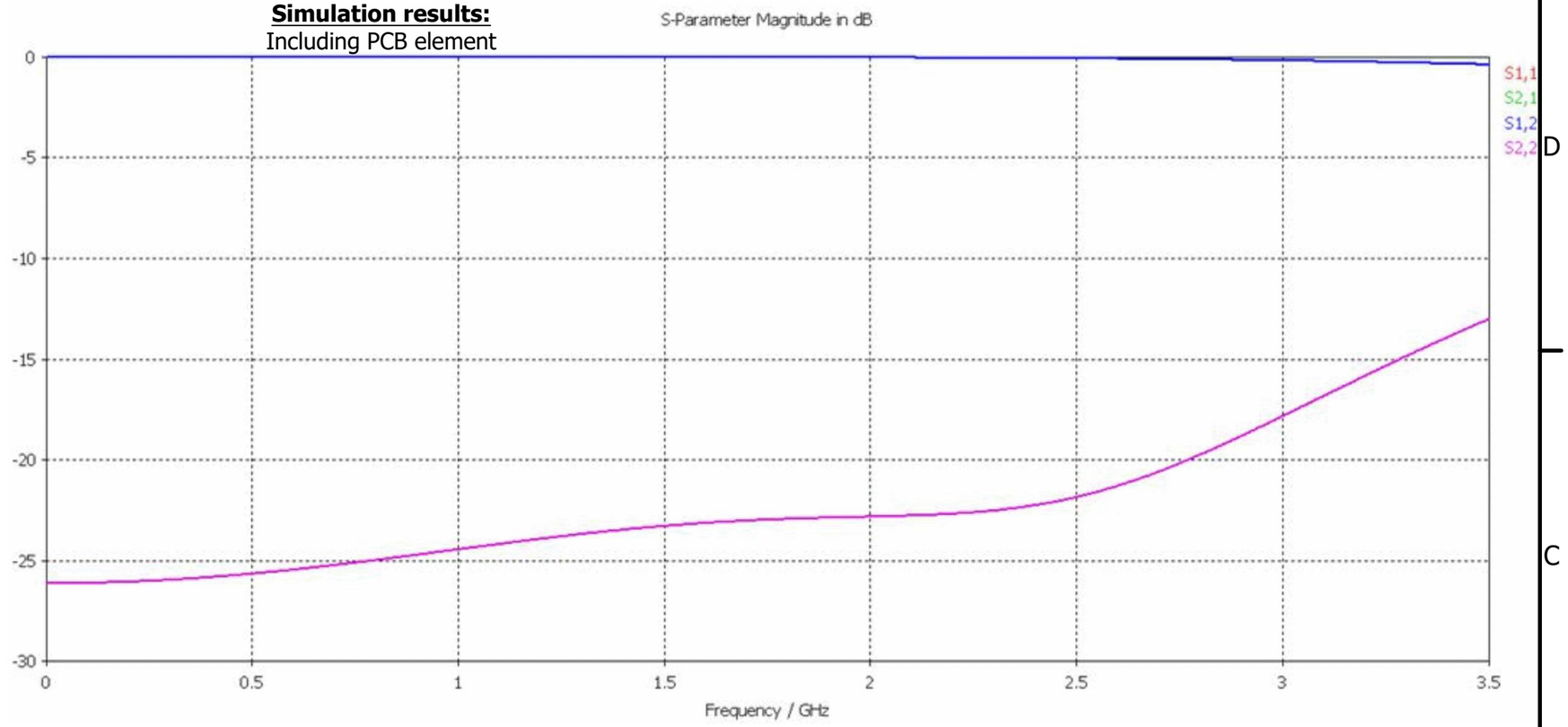

Electrical:

Impedance	75Ω
Frequency range	DC ~ 3.0 GHz
Working voltage	500 V_{RMS}
Dielectric withstanding voltage	1500 V_{RMS}
Reflection factor (VSWR)	1.15 MAX DC ~ 6.0 GHz
	1.33 MAX DC ~ 12.0 GHz
Contact resistance	Centre contact ≤1.5 mΩ
	Outer contact ≤1.0 mΩ
Insulation resistance	≥5000 MΩ

Materials:

Centre contact	Phosphor Bronze / Au plated
Metal parts	Zinc Alloy / Ni plated
Insulators	TPX

Environmental:

Temp ranges	-65 ~ +85°C
Mating cycles	250
Vibration	N/A
Salt spray	N/A

Processing:

Hand solder	Recommended / 260°C MAX 10 ~ 12 seconds dwell time
Wave solder	Recommended / 260°C MAX 10 ~ 12 seconds dwell time
Reflow solder	Not recommended

Suggested PCB layout
Intended as a starting point for design iteration

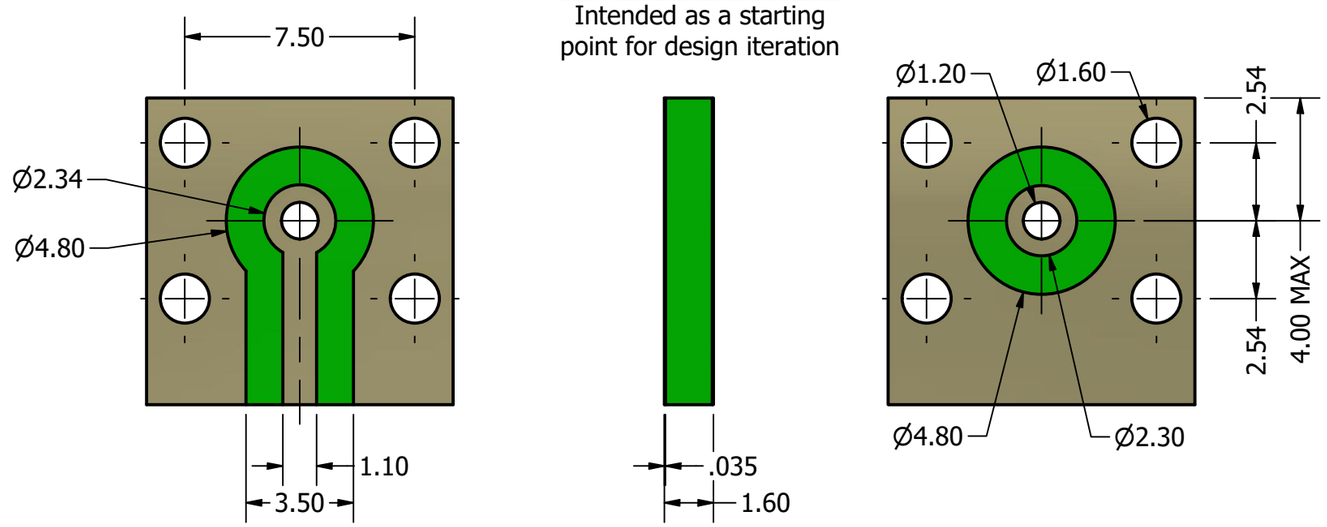

Design Right Protected	Material:	Finish:		Gen Tol ±0.10 Angular ±2°	DO NOT SCALE Unit of Measure: millimeters (mm)
Third Angle Projection	Designed by P. Fayers	Checked by	Approved by	©2024	Date 09 Jan 2008	A3
RoHS Compliant	CAMBRIDGE ELECTRONIC INDUSTIRES	This document and all the data contained herein is and shall remain the property of Cambridge Electronic Industries Ltd and may not be used or copied for any purpose whatsoever without the written permission of Cambridge Electronic Industries Ltd.	Description: 75Ω BNC Socket 3GHz Right Angle Bulkhead, 2.8mm Leg with Pathfinder		
			Part No: XBS-03-RB28-NNV Cust	Issue 3.3	Sheet 2 / 2