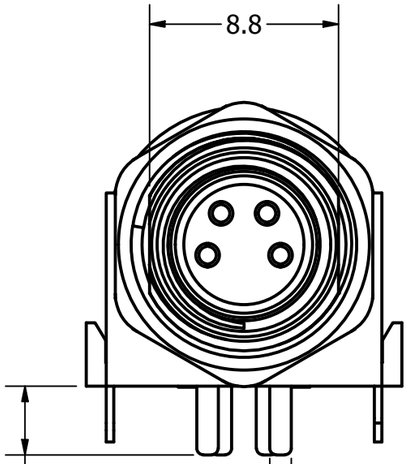

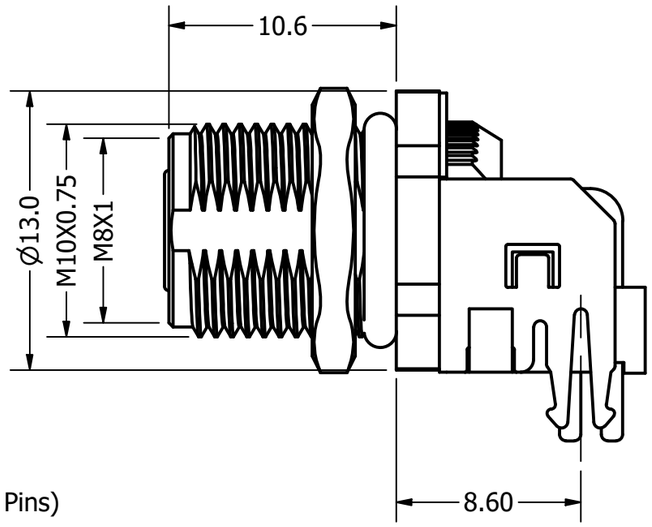

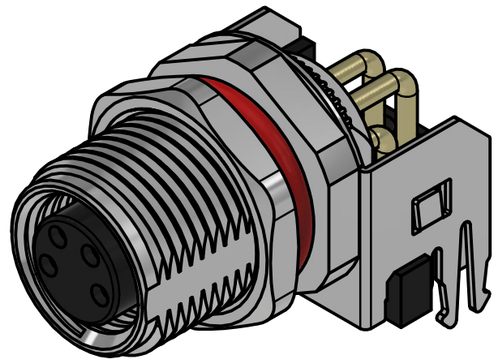

	A CODE	B CODE
2 PIN	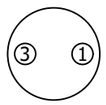	
3 PIN	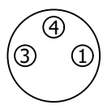	
4 PIN	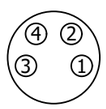	
5 PIN		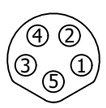
6 PIN	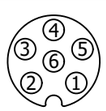	
8 PIN	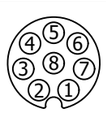	

Electrical:

Current rating	3A (2 ~ 5 Pins), 1A (6 ~ 8 Pins) AC/DC
Voltage rating	60V (2 ~ 3 Pins), 30V (4 ~ 8 Pins) AC/DC
Withstanding voltage	500V AC/minute between contacts (2 ~ 5 Pins)
	250V AC/minute between contacts (6 ~ 8 Pins)
Insulation resistance	100MΩ MIN
Contact resistance	10mΩ MAX

Environmental:

Operating temperature	-40°C ~ +80°C
Ingress protection	IP67

CC08R-XXS-FX-PBS

- Shielded
- Panel mount PCB dip
- Coding
- Front fastened
- Socket
- No. of contacts
- Right angled
- M8

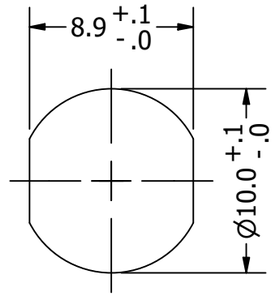

Recommended panel cutout

REVISION HISTORY				
REV	DESCRIPTION	CHG REF	DATE	DESIGNER
1.0	Origin	-	21 Aug 2023	Owen Page
1.1	Drawing Update	FB / SUPP	29 Sep 2026	Peter Millard

Design Right Protected	Material:	Finish:	Gen Tol .X ±0.30 .XX ±0.10 .XXX ±0.05	DO NOT SCALE	
				Unit of Measure: millimeters (mm)	
Third Angle Projection	Designed by Owen Page	Checked by Martin Smith	Approved by	©2026	Date 21/08/2023	A3
RoHS Compliant	CAMBRIDGE ELECTRONIC INDUSTRIES	This document and all the data contained herein is and shall remain the property of Cambridge Electronic Industries Ltd and may not be used or copied for any purpose whatsoever without the written permission of Cambridge Electronic Industries Ltd.	Description: M8 (X) Pin A/B Code Socket, Front Fastening, Right Angle, Shielded		
			Part No: CC08R-XXS-FX-PBS	Issue 1.1	Sheet 1 / 2

Source:E:\Cambridge Connectors\Live Products\Engineering Data\(CC#) M-Connectors\M8

Recommended PCB footprint

2 PIN

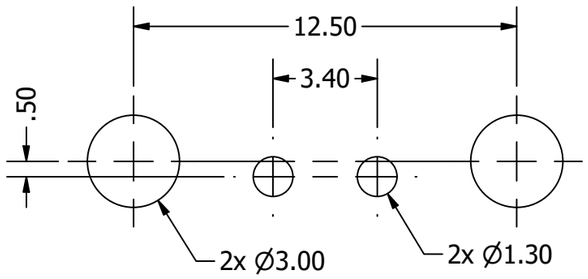

3 PIN

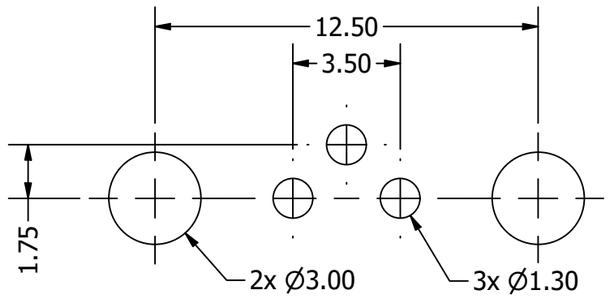

4 PIN

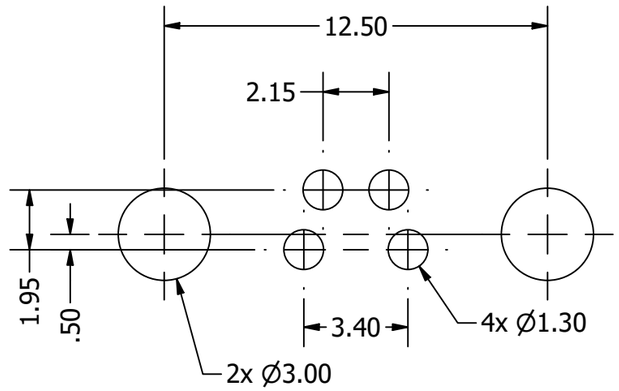

5 PIN

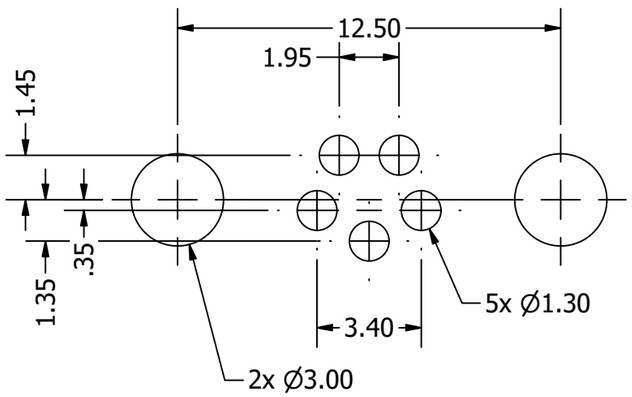

6 PIN

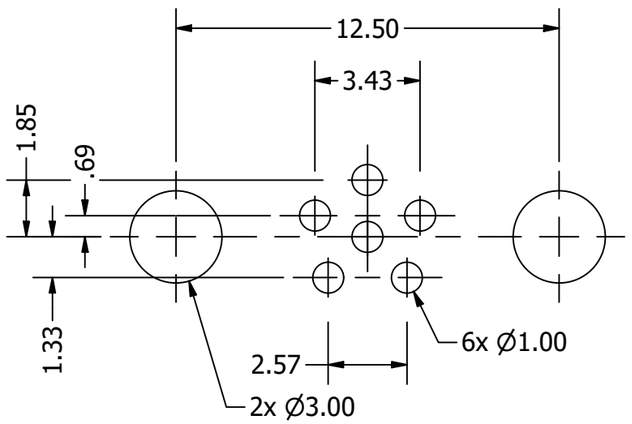

8 PIN

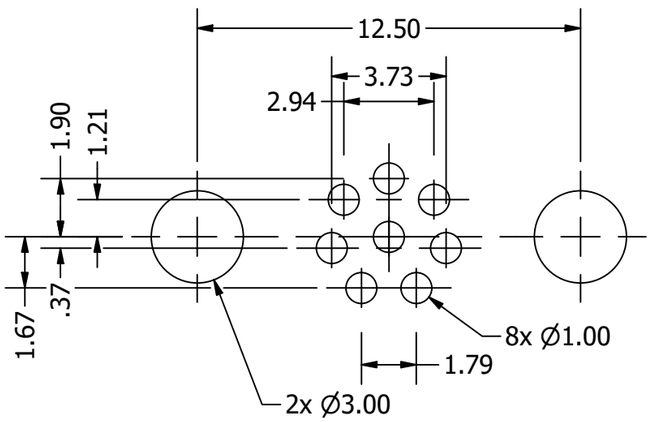

Design Right Protected	Material:	Finish:	Gen Tol .X ±0.30 .XX ±0.10 .XXX ±0.05	DO NOT SCALE	
				Unit of Measure: millimeters (mm)	
Third Angle Projection	Designed by Owen Page	Checked by Martin Smith	Approved by	©2026	Date 21/08/2023	A3
RoHS Compliant	CAMBRIDGE ELECTRONIC INDUSTRIES	This document and all the data contained herein is and shall remain the property of Cambridge Electronic Industries Ltd and may not be used or copied for any purpose whatsoever without the written permission of Cambridge Electronic Industries Ltd.	Description: M8 (X) Pin A/B Code Socket, Front Fastening, Right Angle, Shielded		
			Part No: CC08R-XXS-FX-PBS	Issue 1.1	Sheet 2 / 2