# M8 (X) Pin A/B Code Socket, Front Fastening, Right Angle, Shielded

Part Number CC08R-XXS-FX-PBS

Issue 1.1

## General Description

The CC08R-XXS-FX-PBS is a M8 front fastening panel socket with right angle pins for mounting directly on a PCB. This circular connector is available in A and B coding, with the option of a 2 to 8 way pin assignment with shielding. The M8 is the best connector type for industrial sensors, due to its robust and secure format coupled with the waterproof rating of IP67.

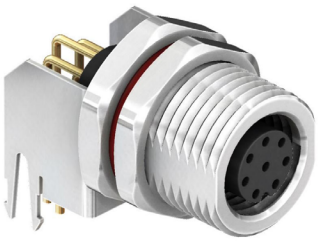

CC08R-XXS-FX-PBS

- Shielded
- Panel Mount PCB Dip
- Coding: A or B
- Front Fastened
- Socket
- No. of Contacts
- R/A
- M8

| Specification | |
|---|---|
| Coding | A or B |
| Contact | 2 to 8 Pins |
| Current Rating | 3A AC/DC (2 to 5 Pins)<br>1A AC/DC (6 to 8 Pins) |
| Voltage Rating | 60V AC/DC (2 to 3Pins)<br>30V AC/DC (4 to 8Pins) |
| Contact Resistance | ≤10mΩ |
| Insulation Resistance | ≥100MΩ |
| Withstanding Voltage | 500V AC/Minute (2 to 5 Pins)<br>250V AC/Minute (6 to 8 Pins) |
| Operating Temperature | -40°C to +80°C |
| Waterproof Rating | IP67 |
| | |
| Material Plating | |
| Insulator | UL94V-0 Black |
| Connector Contacts | Brass Gold Plated |
| Connector Body | Brass Nickel Plated |
| Connector Nut | Brass Nickel Plated |
| Seal Ring | Rubber Black |
| Shielded Shell | Brass Nickel Plated |

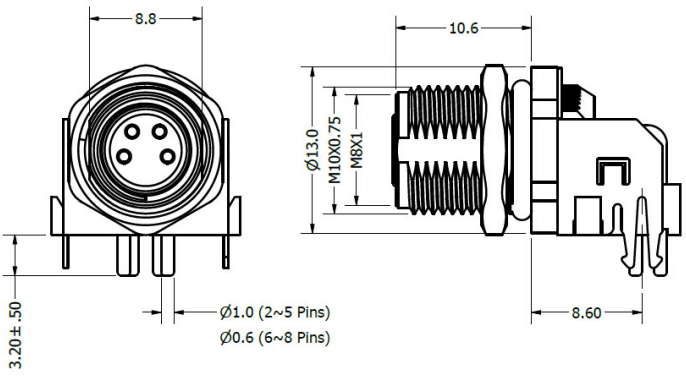


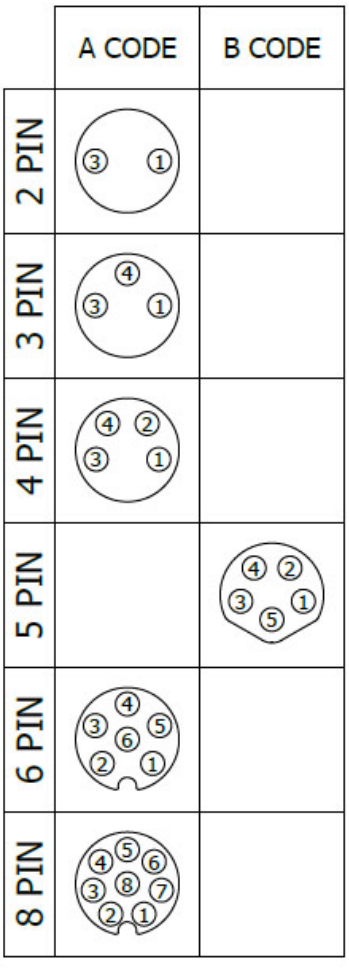


Drawing Issue 1.1


Tel: +44 (0)1223 860041
Tel: +44 (0)1223 863377

Website: www.CambridgeElectronics.com
Email: sales@cambridgeelectronics.com